SOCIETY OF
MINING ENGINEERS
of
AIME

540 ARAPEEN DRIVE — SALT LAKE CITY, UTAH 84108

PREPRINT
NUMBER

77-AM-22

Reviewer I marked ms

STRESS ANALYSES OF LONGWALL AND SHORTWALL FACES USING POWERED SUPPORTS

PLEASE RETURN AS SOON
AS POSSIBLE AND NOT
LATER THAN TWO WEEKS.

Syd S. Peng

H. Y. Chang

College of Mineral & Energy Resources
West Virginia University
Morgantown, West Virginia

For presentation at the 1977 AIME Annual Meeting
Atlanta, Georgia - March 6-10, 1977

Introduction

In the past few years, the numbers of underground coal mines this country using longwall mining method have been dramatically increased. In the latest count there are approximately 90 longwal faces amounting roughly 8% of the total underground production. Meanwhile, shortwall mining adapting longwall powered supports to coal mining and handling systems in room and pillar mining is als gaining importance in the Appalachian coal field. Although there are only 7 operating shortwall faces so far, indications are that it will be increasing steadily.

Check.

Modern longwall faces are highly mechanized and productive. One of these key elements that contribute to the success of moder longwall mining is self-advanced powered supports. There are seve types of powered supports. Frame type is two sets of one to four hydraulic legs supporting beam-type roof canopy and floor base. However, chock type is more popular and connected to broad roof an base structure. Shield supports were introduced recently ~~but~~ and prov to be highly successful (1). A shield support consists of two hydraulic jacks mounted between a base plate and a gob shield. Th base plate is hinged to gob shield which is in turn hinged to roof canopy.

Suggest' they say why

In the selection of powered supports, there are several formu (2,3). Wilson (3) for example recommended a setting load density 1 ton per square foot (1 tsf) for British coal fields which requir a yield load density of 1.25 tsf if the yield-to-setting load rati is 1.25 as recommended by Ashwin, et. al. (4). However, the capac of powered supports used in this country is such that it provides ield load density ranging from 6 to 12 tpf (5). There is no doubt nat different geological conditions require different support density, ut the large discrepancy between European and American practices prompted ne question: What do we stand to gain from setting larger-than-required oad density? One aspect of the answer is to evaluate the roof damage any caused by higher-than-required load density. This can be achieved investigating the stress fields induced in the immediate roof when powered support is set against the roof.

? who is doing this ?

Stress distribution and rock fracture zones in the immediate roof a longwall face has been investigated for a conventional hydraulic ck supports (6). Although their results revealed some correlation tween field observation and analytical model, no consideration was ven as to the effects of varying setting load density on the immediate of. This paper presents structural behavior analyses of a coal mine ring different mining stages. Longwall faces supported by both chock d shield type supports are analyzed, while only chock-supported ortwall faces are investigated.

What correlation?

What about findings of investigations

finition of the Problems

Chock supported faces

What set of parameters considered.

Consider a longwall face supported by chocks, the stress fields in e immediate roof undergo three sequential stages; before, during and ter setting (fig. 1). Whenever a new cut of coal is made and before ocks are advanced to support, roof tends to converge (fig. 1A). When ocks are set against the roof, vertical pressures are vertically plied through the legs onto the roof creating a stress field (fig. 1B) perimposed on the previous one. After the setting, if the setting essure is not enough or when main roof starts caving, it generates not only a vertical resistance force on the chocks but also horizontal frictional force, because as roof converges it also moves in blocks toward the gob simultaneously. However, it is believed that the stress condition during setting is temporary and moves into "after setting" condition shortly after setting.

Give reasons for the belief.

During "after setting" period, the resultant force is not vertical, instead it inclines some angles to the vertical which can be divided into the vertical and horizontal components. The vertical component is composed of two sections (fig. 2), i.e., front and rear canopy. The free body diagram of front canopy is shown in fig. 3A. The resultant P_1 on the front canopy can be determined by the principle that total moments must be zero in order to maintain equilibrium,

$$F\, l_1 = P_1\, l_2 \tag{1}$$

$$P_1 = \frac{l_1}{l_2} F \tag{2}$$

where F is capsule pressure, l_1 and l_2 are the distance between hinge point and capsule pressure F and between hinge point and resultant force P_1, respectively. If the canopy is rigid and maintains full contact between canopy surface and roofline, the resultant P_1 is linearly distributed across the front canopy with larger stress near the hinge point. Depending on the location of P_1, the linear stress distribution can be triangular or trapezoidal. However, roof is frequently cut into steps, the geometry of contact between canopy and roofline varies. This will result in different stress distribution on the canopy (fig. 3B).

Engineering assumption!

Once force in front canopy is known, force distribution in rear canopy can be found as shown in fig. 3C.

$$P_2 + P = 2T \qquad (3)$$

$$P_2 = \frac{1}{l_3} \quad T\,(l_3 + l_4) - P\,(l_3 + l_5) \qquad (4)$$

where P_2 is resultant force on rear canopy, T is setting load for each leg, P is shear force applied at the front end and equals to the total force in front canopy. Again linear force distribution occurs if canopy is rigid. Trapezoidal force distribution is more likely due to the application of shear force, P at the front end, and larger roof sag at the rear. However, in reality roof canopies are not perfectly rigid and subject to infinitesimal deformation. Force distribution for deformable body differs from rigid one. The most probable force distribution is shown in fig. 3D where larger load occurs immediately above each chock leg.

High setting loads minimize convergence in time reduces lateral moment that causes side & damage

Depending on the rigidity of leg mounting to canopy and base, horizontal force causes legs to tilt toward the gob (fig. 4A) or bended as shown in fig. 4B. Excessive tilt induces rotation of chock toward gob area while excessive bending prevents legs from free vertical travel.

B. Shield supported faces

Basically a shield support is a determinate stable structure because hinge joints provide relative rotation of canopy about base plate which is fixed on the floor (fig. 5). The analysis of force distribution on shield supports follows the same sequential stages as indicated in chock faces.

When shield is set against the roof, external forces should be in equilibrium, i.e. (assuming no frictional force) vertical force on canopy = reaction on base plate + support weight) support weight can be neglected if force on canopy is much larger than support weight. Because canopy is hinge-connected to gob shield (CD) at hinge point C, there must be no resistant moment at this point. This means that resultant of force on canopy passes through hinge C (fig. 6A) and that total force on both sides of the resultant force equals to each other. The load distribution on each side is then a function of l_1 and l_2. To satisfy equilibrium conditions, resultant reaction force R must be colinear with resultant force P_3 assuming force on gob shield exerted by broken rocks in the gob is negligible. The location and magnitude of R is used to derive stress distribution on the base plate.

However, during setting, the setting force T which is applied through hydraulic cylinders undergoes small rotation θ with respect to hinge point D (fig. 6B) and a horizontal translation Δ of canopy (fig. 6C) such that

$$\Delta = l_{CD}\, \theta \;\; \mathrm{Sin}\, \phi \qquad (5)$$

This translation produces horizontal frictional force as shown in fig. 6B. The actual value of frictional force depends on the coefficient of friction between canopy and roof rocks which ranges from zero for no friction to a maximum of 0.3. As a result, the resultant force on top canopy dips toward the face (fig. 7A).

Again after setting immediate roof starts to converge while in the meantime moves toward the gob. Because of the hinged structure, this causes roof canopy to move forward and results in force distribution as shown in fig. 7B. The reaction force exerted by roof canopy on the roof is such that it tends to close fractures and prevents fractures from opening up or propagating further. However, if the seam suddenly becomes thinner, the large reduction in height may move point C to just above or very near point E and cause complete turn over. Furthermore when R is close to point E, higher stress occurs near E and may cause base plate dig into the floor. On the other hand, a sudden increase in seam height will require roof canopy to move away from face during setting and leave larger unsupported roof between face and tip of roof canopy.

↙ fig 6

The Model and Boundary Conditions

From simple structural analyses mentioned earlier, there are three sequential stages of loading conditions for a powered support supported face i.e. before, during and after setting. Each loading stage will induce different stress fields in the immediate roof and results in different ground movements. This paper concerns only with those before and during support setting. the 'After setting' condition is excluded for the time being due to uncertainty in roof fracture criteria.

In the analyses, an 8 ft. Pittsburgh coal seam lying at an average of 600 ft. below surface is mined with three different supports. They are (1) longwall chocks, (2) longwall shields, and (3) shortwall chocks. For each type of support, two support loads were investigated for cases before and after a web cutting. Table 1 shows all ~~the complete~~ cases studied. Notice that "before cutting" coal (chocks) represents both shortwall (SW) and longwall (LW) faces and that shield supported face was investigated for condition "before cutting" because most shield supports are equipped with immediate forward support system which lessens the "after cutting" period to the minimum.

Not clear to operator or person unfamiliar with this work.

TABLE I

Mining Stages	Support Loading Conditions		
	0	35 tons/leg	125 tons/leg
Before cutting (chocks)	a	b	c
After cutting (LW chocks)		d	e
After cutting (SW chocks)		f	g
Before cutting (shield)		h	i

As in any other elastic problems, solution is good only for boundary conditions defined. Therefore, in order to be more representative of field conditions, the boundary conditions for a longwall or shortwall face should be accurately defined. However, some portions especially gob area is unaccessible for observation. Some other portions like face area although observable is ~~different~~ difficult to instrument for quantitative data. Nevertheless, constant underground field observations coupled with field instrumentation contributes to the determination of boundary conditions consistent with the longwall or shortwall face presented in this paper.

Not boundary conditions but a supposed behaviour around a face.

Fig. 8 shows boundary configurations simplified for ~~this paper~~ the investigation. A straight vertical break of roof rock occurs near the edge of the rear canopy (CD). This is because the immediate roof is weak (drawslate, rider coal and shale) and caves as soon as powered support is advanced (fig. 9). This vertical break stops at point D where the first strong limestone layer occurs. From there on up an arch-shaped opening forms such that θ ranges from 45° to 55°. The θ angle was measured through visual observation in tail- and head-entries and by surface boreholes from which the levels of strata separation can be monitored as a function of face distance.

any reference?

mine, observer?

I don't understand what "whole model is 1.75' ---" means?

The finite element model simulating the above-mentioned problem is shown in Fig. 10. Zone A represents region where strata are essentially ~~Intack~~ intact. Zone B is gob region where fragmented rock blocks are compacted while Zone C is solid coal. Young's modulus and Poisson's ratio for strata in Zone A and C ~~are~~ have been obtained from lab tests. Young's modulus for Zone C is assumed to be equal to 1/10 of that of Zone A. The whole model is 1.75 ft. thick which is half the full width of Gullick-Dobson chocks. Horizontal displacements are assumed to be zero along vertical boundaries while the vertical displacement is zero along bottom horizontal boundar~~ies~~y.

X

why mention manufacturer?

Results and Discussions

Figs. 11 to 19 show ~~contour maps of~~ various stress distributions for various geometrical conditions investigated in this research. Although there are differences in absolute magnitudes, some generalization can be made for chock- and shield- supported faces.

A. Chock-supported faces

In chock-supported face, maximum principal stress (compression is considered negative while tension is positive) is approximately horizontal (figs. 11 to 17). Maximum value occurs at some distance ahead of the face and immediate roof directly over chock supports. Higher stress gradient occurs near but in front of the face whereas stress is rather unifrom in area above chock supports. However, tensile stress zone occurs in area above chock supports the size of which depends on chock capacity.

chock capacity or chock setting load?

Minimum principal stress is approximately vertical, the average of which is the overburden weight. Maximum occurs at the corner of roof line and face. It reduces counterclockwise to minimum at the contact between roofline and chock canopy. High stress gradient occurs in area immediately above chocks and along contact between rock fragments and main roof in the gob area.

? I would have thought max shear at face line

Minimum shear stress is also maximum at the corner of roofline and face. Its pattern is rather similar to that of minimum principal stress except smaller in magnitude.

B. Shield-supported faces

Maximum principal stress (figs. 18 to 19) is tensile immediately above shield supports and extends some distance upward in the gob. Maximum also occurs some distance ahead of the face at the roofline level.

Confusing to reader

Similarly, maximum of minimum principal stress is located at the corner of roofline and face. It decreases clockwise to minimum at the contact between roofline and shield canopy. Another maximum occurs at the rear edge of shield canopy near the gob side where high stress gradient also exists.

Again maximum shear stress distribution is similar to that of minimum principal stress. Two maxima exist; one at the corner of roofline and face, the other at the rear edge of shield canopy. Maximum shear stress decreases from these maxima on both sides. Minimum occurs immediately above shield canopy.

A Comparison of ~~contour maps of~~ all stress distributions shown in (figs. 11 to 19), under similar conditions indicates:

1. With the exception of shield supported faces, increasing support capacity from 35 to 125 tons per leg reduces the size of maximum principal tensile stress distribution zone from nearly covering the whole immediate roof to a few spots. Tensile maximum principal stress remains at the corner of immediate roof and face. This might account for the frequent encounter of premature roof caving at this

area, especially when ~~weak~~ the immediate roof is ~~present~~ weak. Minimum principal stress and maximum shear stress increase slightly everywhere when chock capacity increases from 35 to 125 tons per leg. Therefore, it appears that the key advantage of increasing chock capacity is to reduce the size of zone or maximum tensile principal stress in the immediate roof. To completely eliminate this tensile zone requires more than 125 ton per leg of capacity.

2. The stress distribution for shield supported faces does not vary with shield capacity from 35 to 125 tons per leg.

3. A Higher stress distribution for "after cutting" is seen in shortwall than in longwall face. But the difference is much smaller than what would have been ~~was generally~~ expected for a 9-t. cut in shortwall compared to a than 2 to 2 1/2 ft. cut in longwall.

References

1. Von der Linden, W. Summary of Performance of Shield Type Supports in the U. S. Presented at the 1976 SME-AIME Fall Meeting & Exhibit, Denver, CO. September 1-3, 1976, Preprint No. 76-F-321, 28 pps.

2. Barry, A. J., O. B. Nair, and J. S. Miller, Specifications for Selected Hydraulic-Powered Roof Supports. U. S. Bureau of Mines, IC 8424, Sept. 1969, 15 pps.

3. Wilson, A. H. Support Load Requirements on Longwall Faces. The Mining Engineer, June 1975, p. 479-491.

4. Ashwin, D. P., S. G. Campbell, J. D. Kibble, J. D. Haskayne, J. F. A. Moore, and R. Shepherd. Some Fundamental Aspects of Face Powered Support Design. The Mining Engineer, August 1970, p. 659 - 671.

5. Kuti, J. Longwall vs. Shortwall Systems. Mining Congress Journal, August 1975, p. 24 - 33.

6. Kidybinski, A., and C. O. Babcock. Stress Distribution and Rock Fracture Zones in the Roof of Longwall Face in a Coal Mine. Rock Mechanics, V. 5, 1973, p. 1 - 19.

(See page 12 for Figure 1)

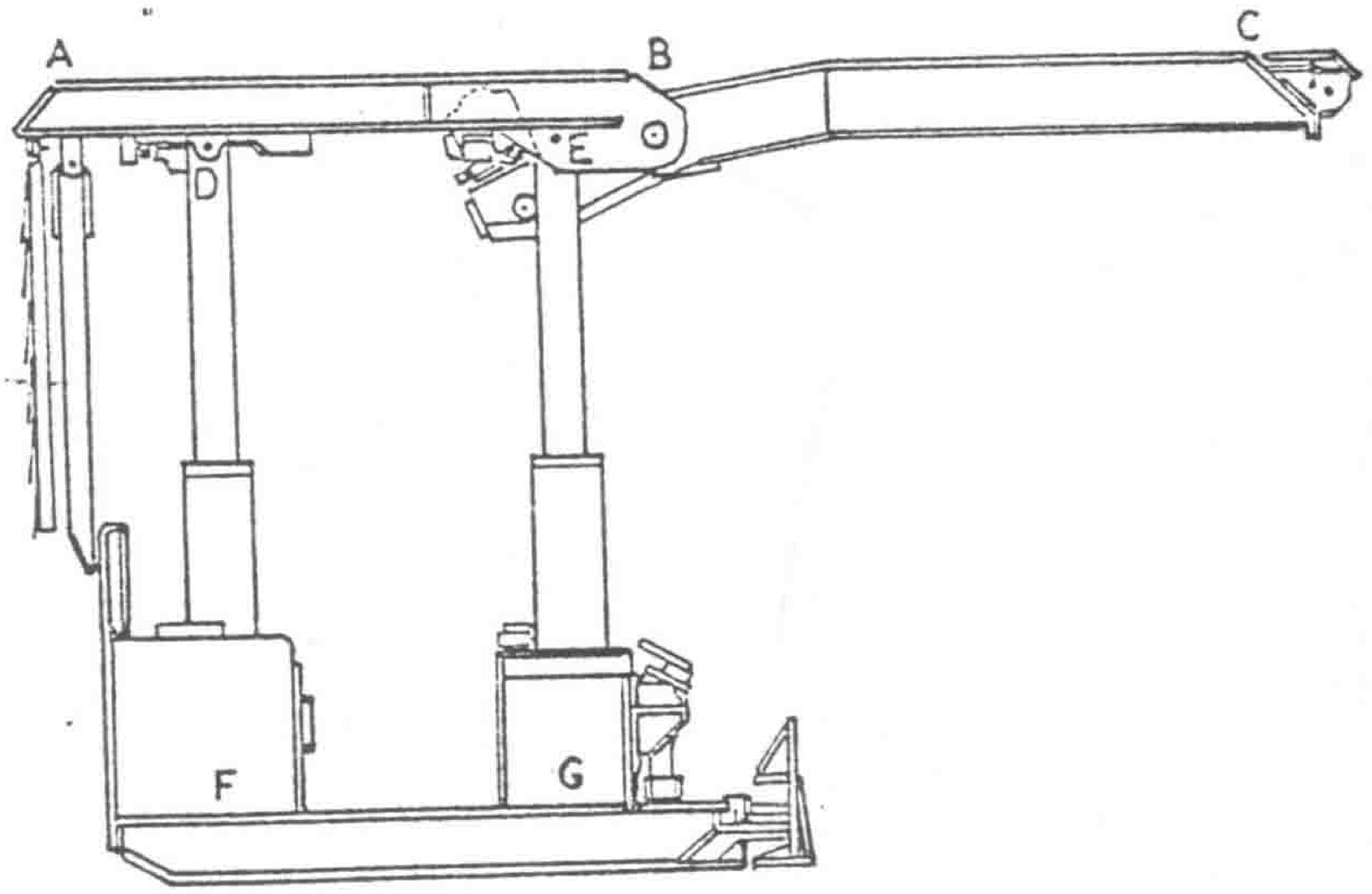

Fig. 2 Schematic View of Gullick-Dobson Chock

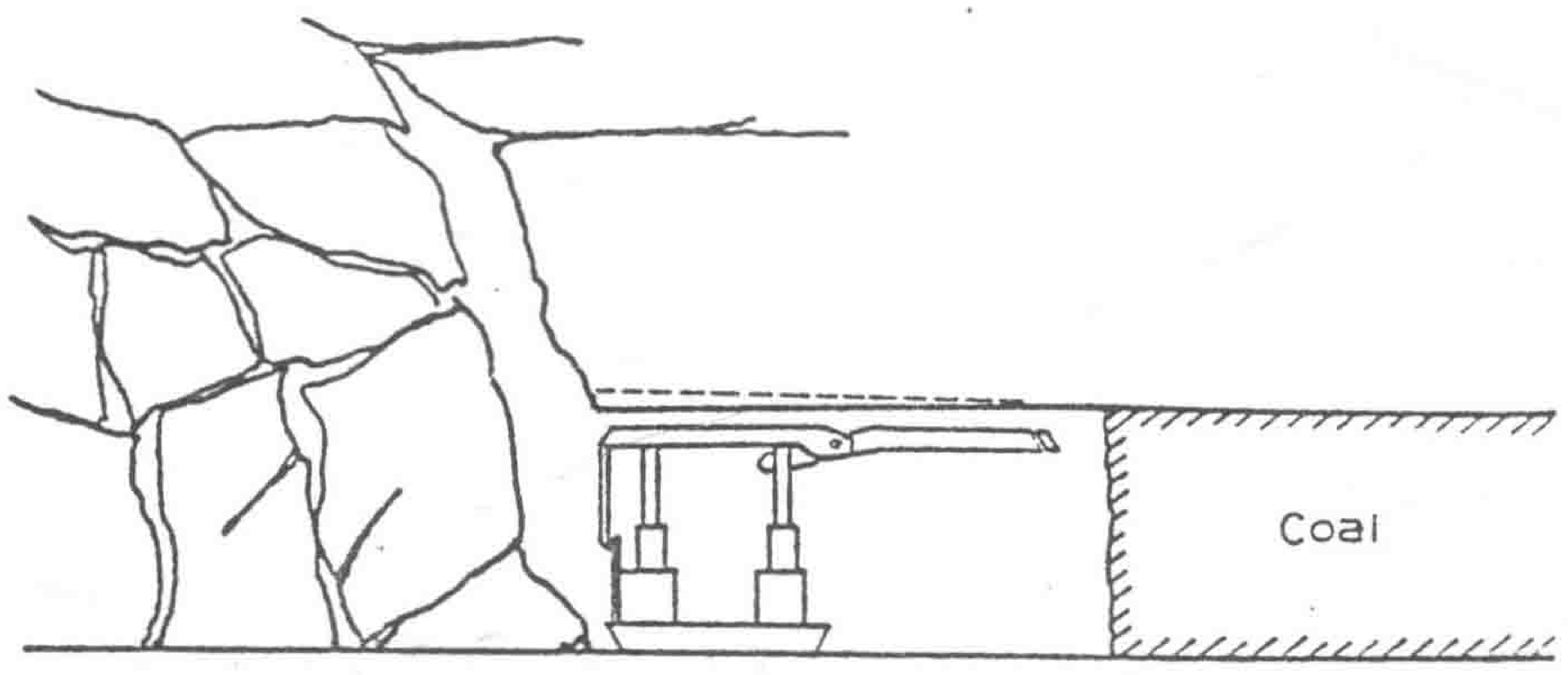

A. Before Setting

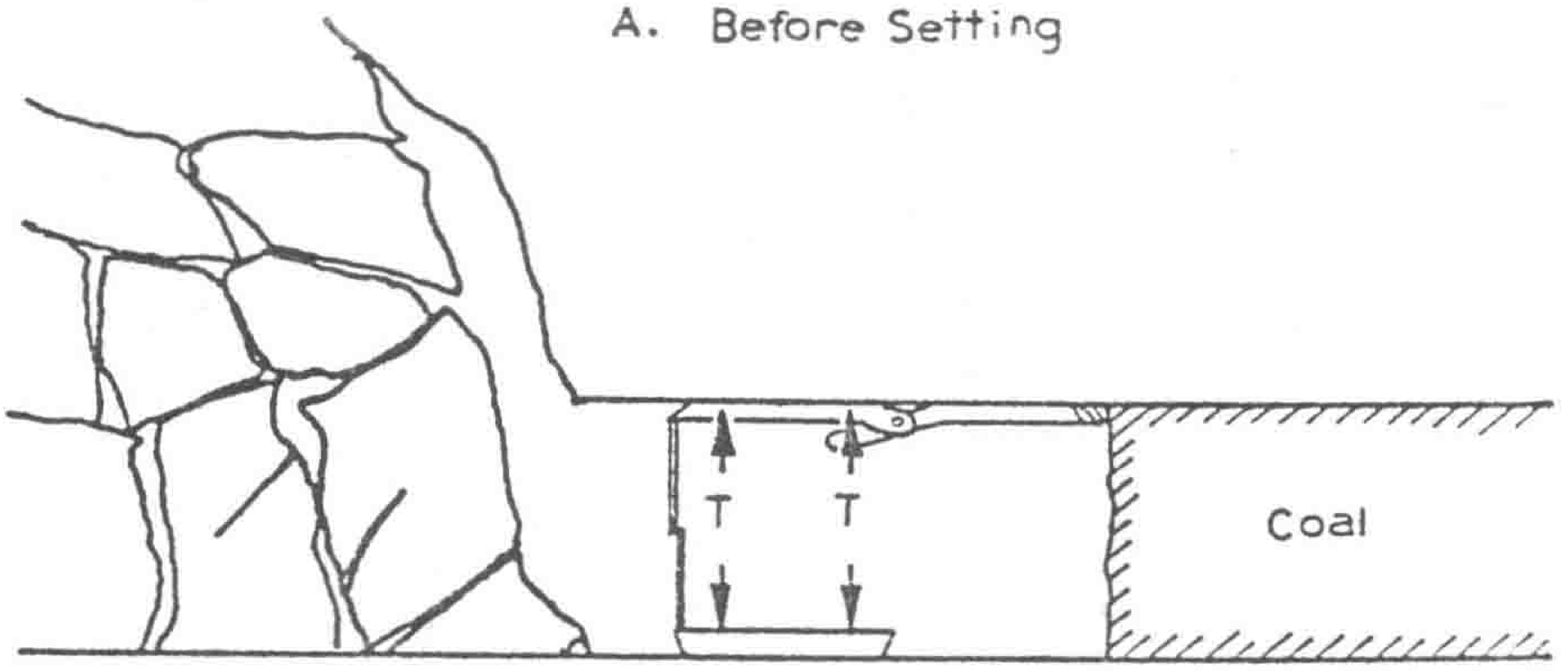

B. During Setting

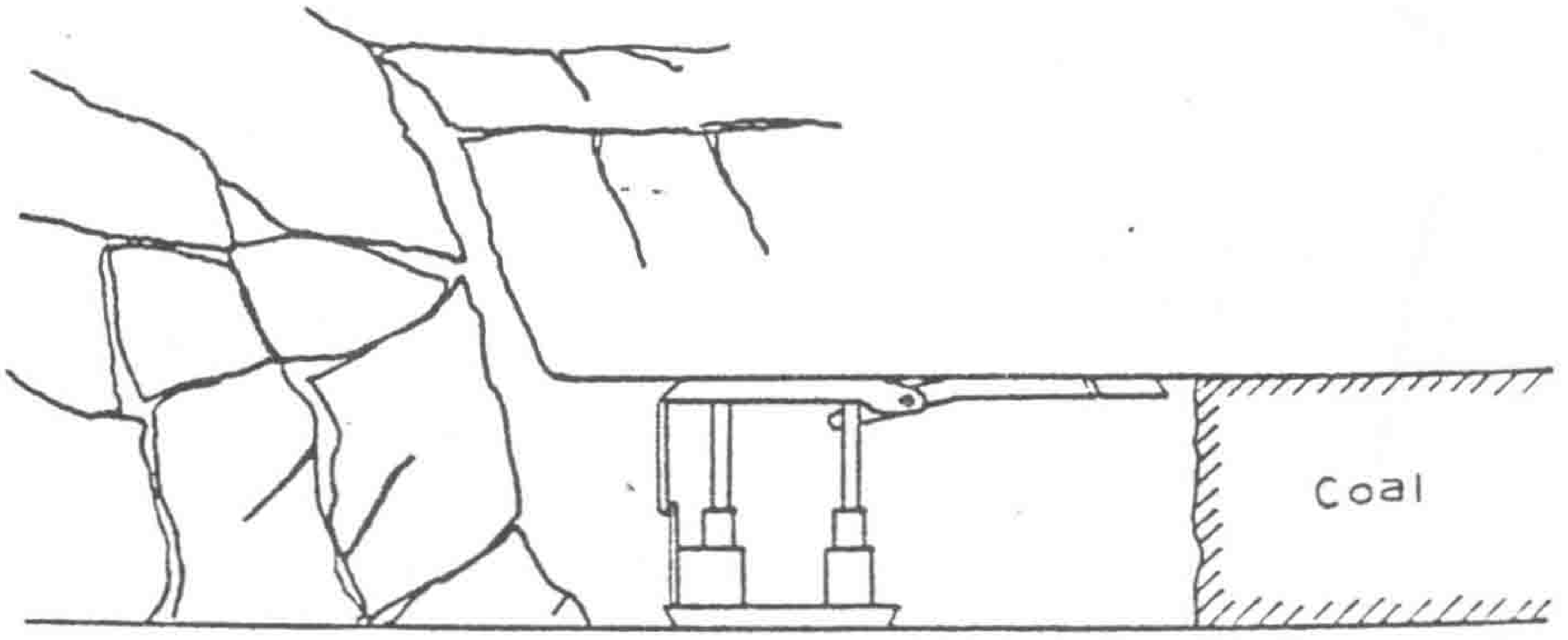

C. After Setting

Fig. 1 Immediate Roof Undergo Three Sequential Stages in Chock Supported Longwall Faces A. Before Setting B. During Setting C. After Setting

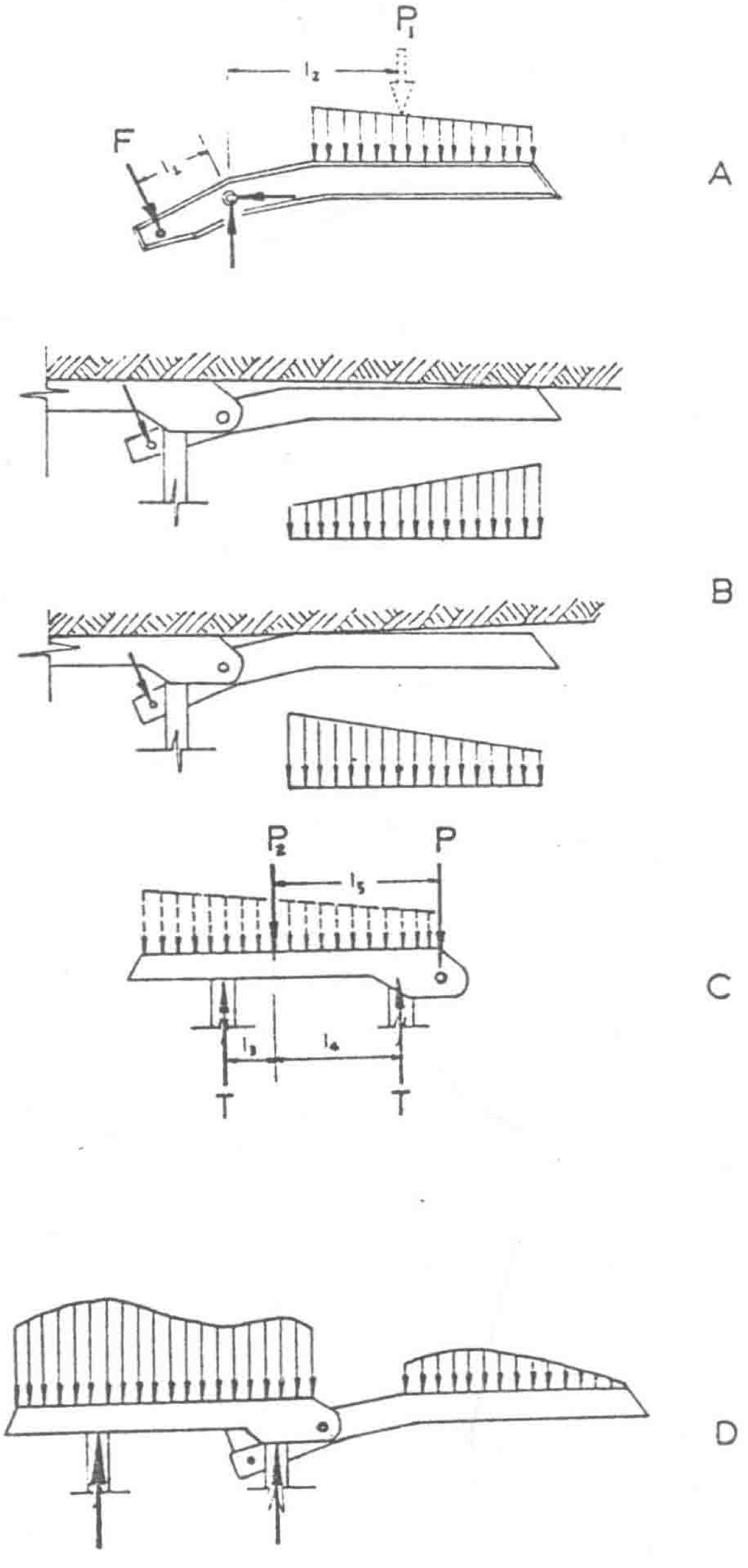

Fig. 3 Force Distribution in Chock Canopy. A. Front Canopy B. Two Possible Force Distributions in Front Canopy C. Rear Canopy D. Possible Force Distribution for Soft Canopy

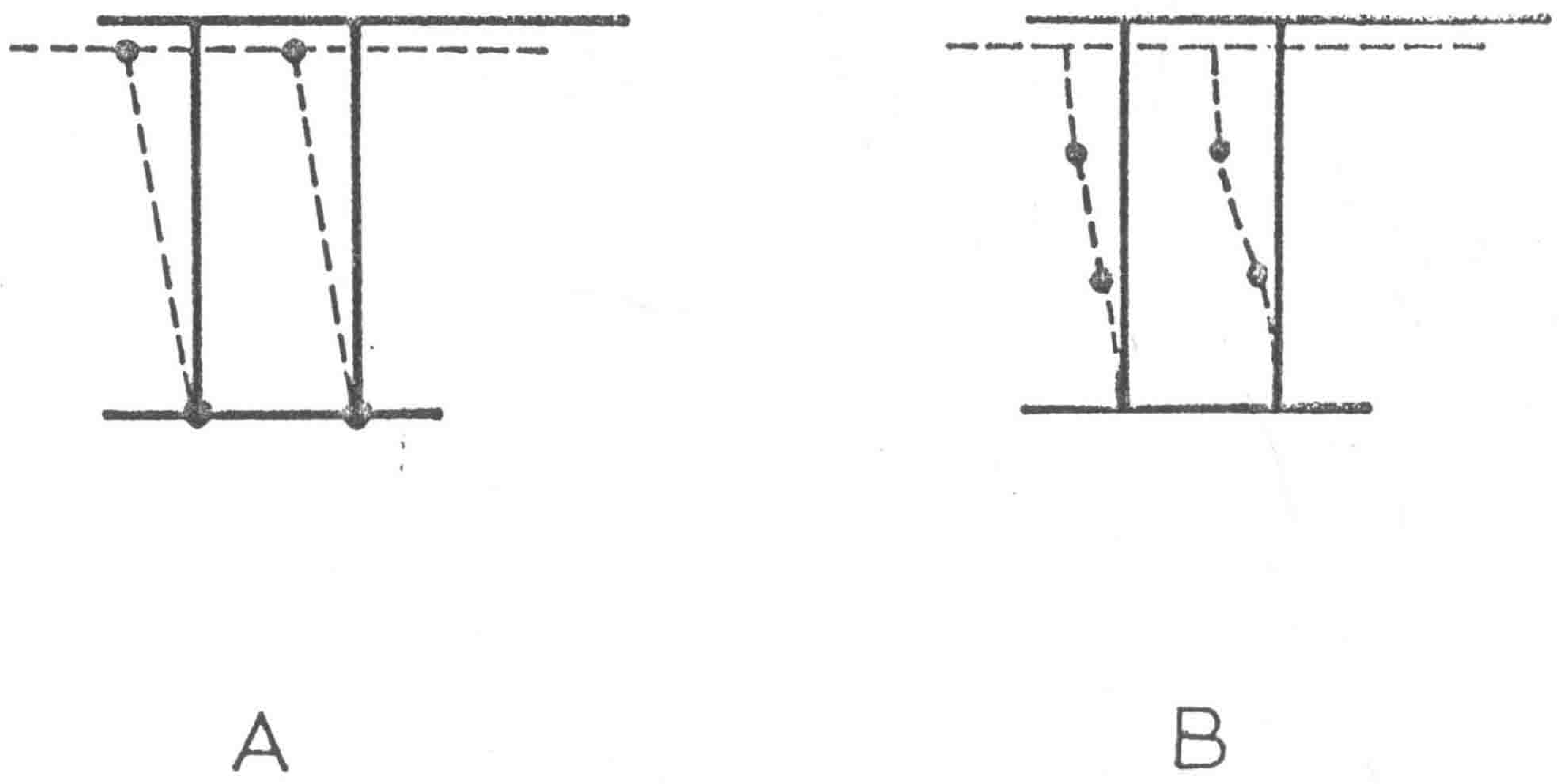

Fig. 4 Possible Chock Geometry Due to Horizontal Force A. Leg Tilt B. Leg Bend

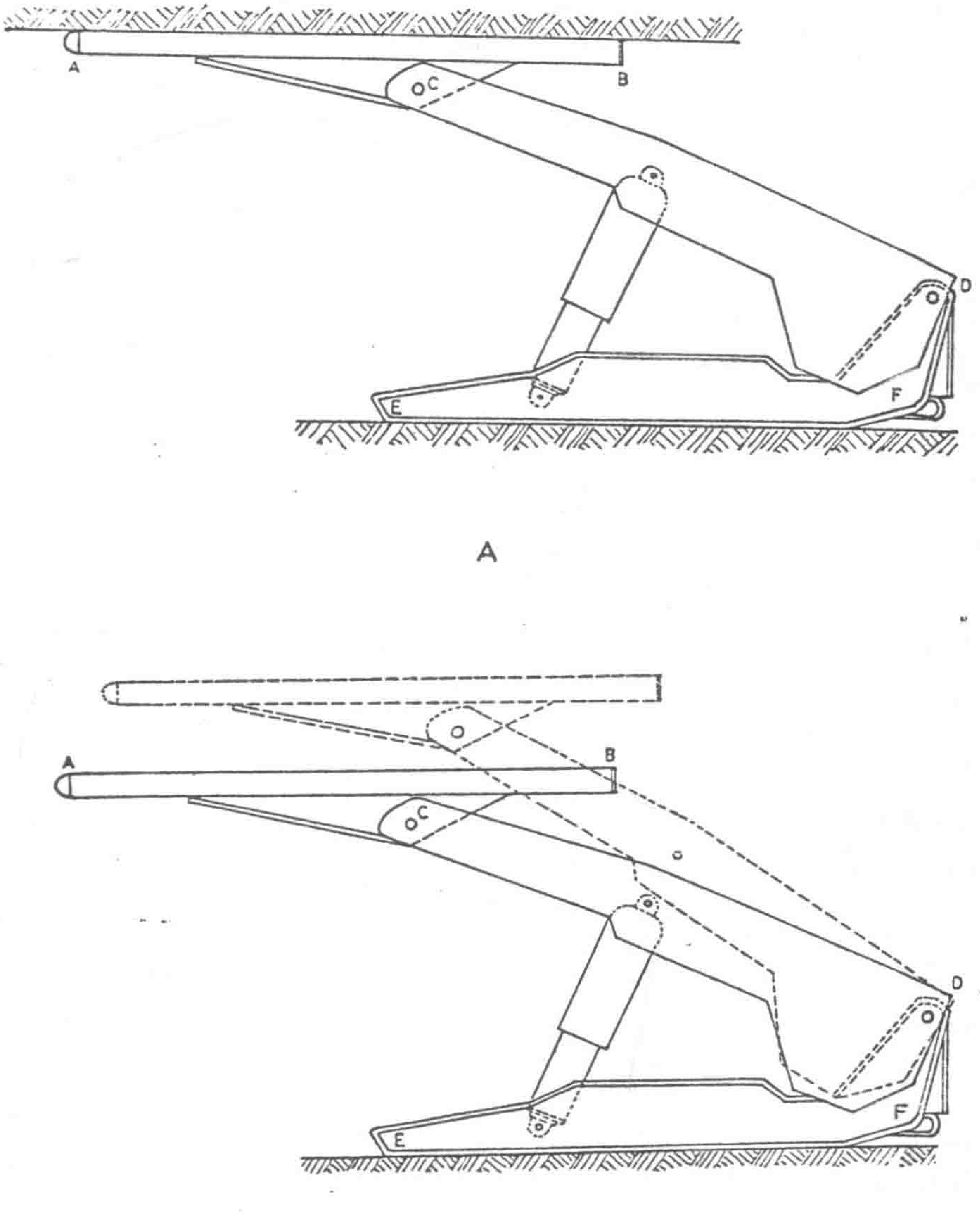

Fig. 5 Schematic View of a Two-Leg Caliper Shield

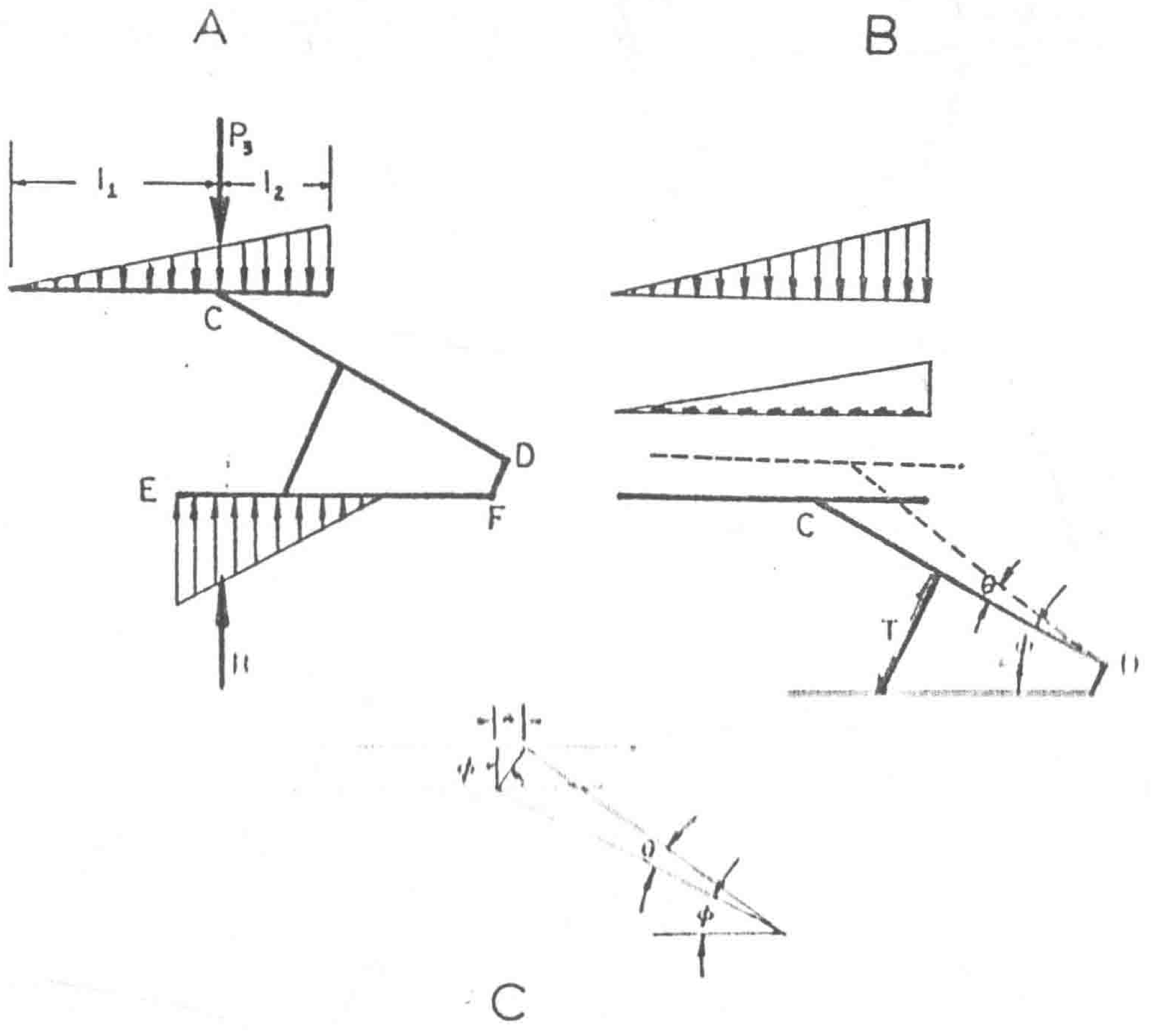

Fig. 6 Force Diagram In Shield Support During Setting

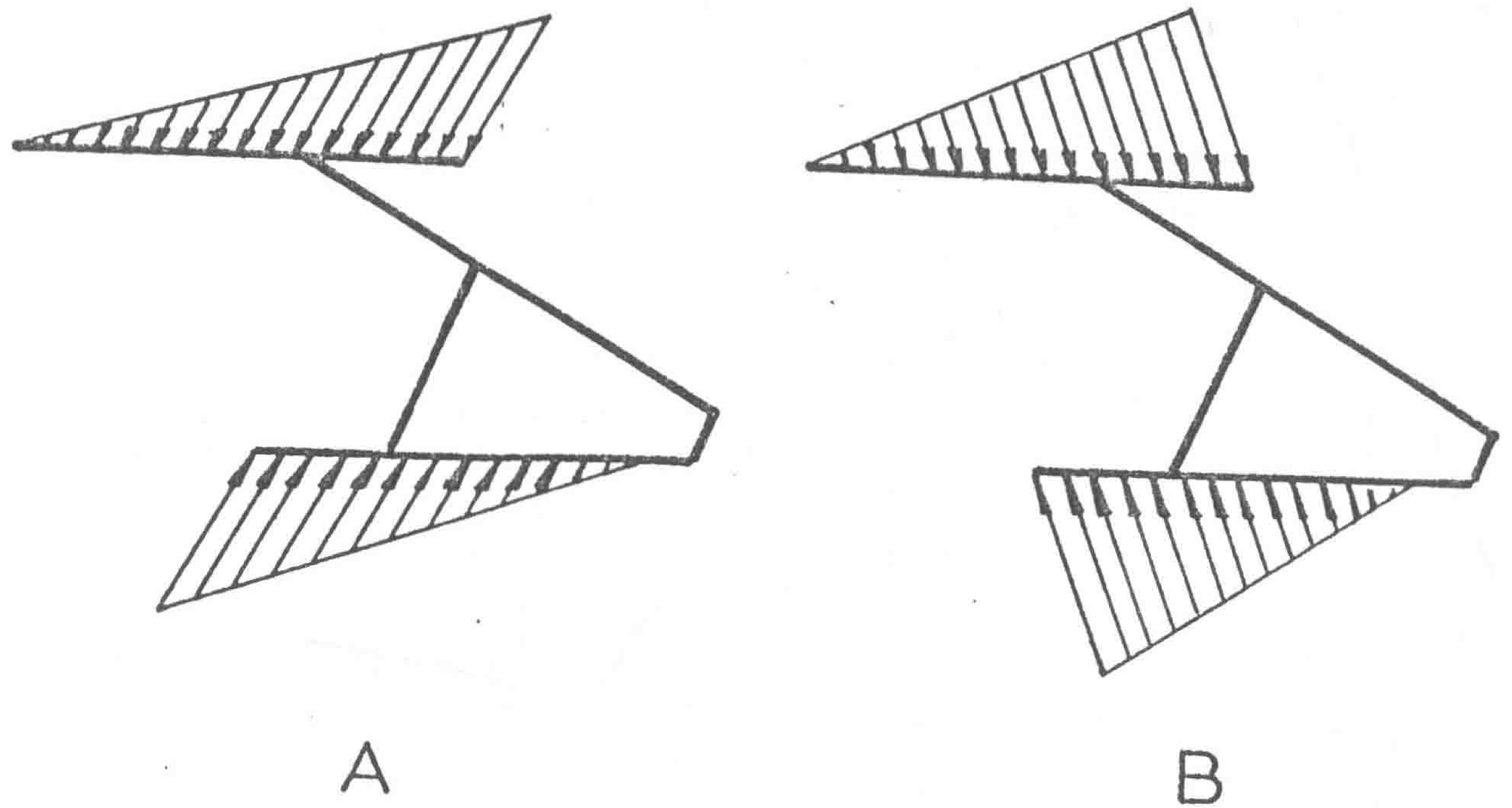

Fig. 7 Two Stages of Immediate Roof Loading In Shield Supported Face
A. During Setting B. After Setting

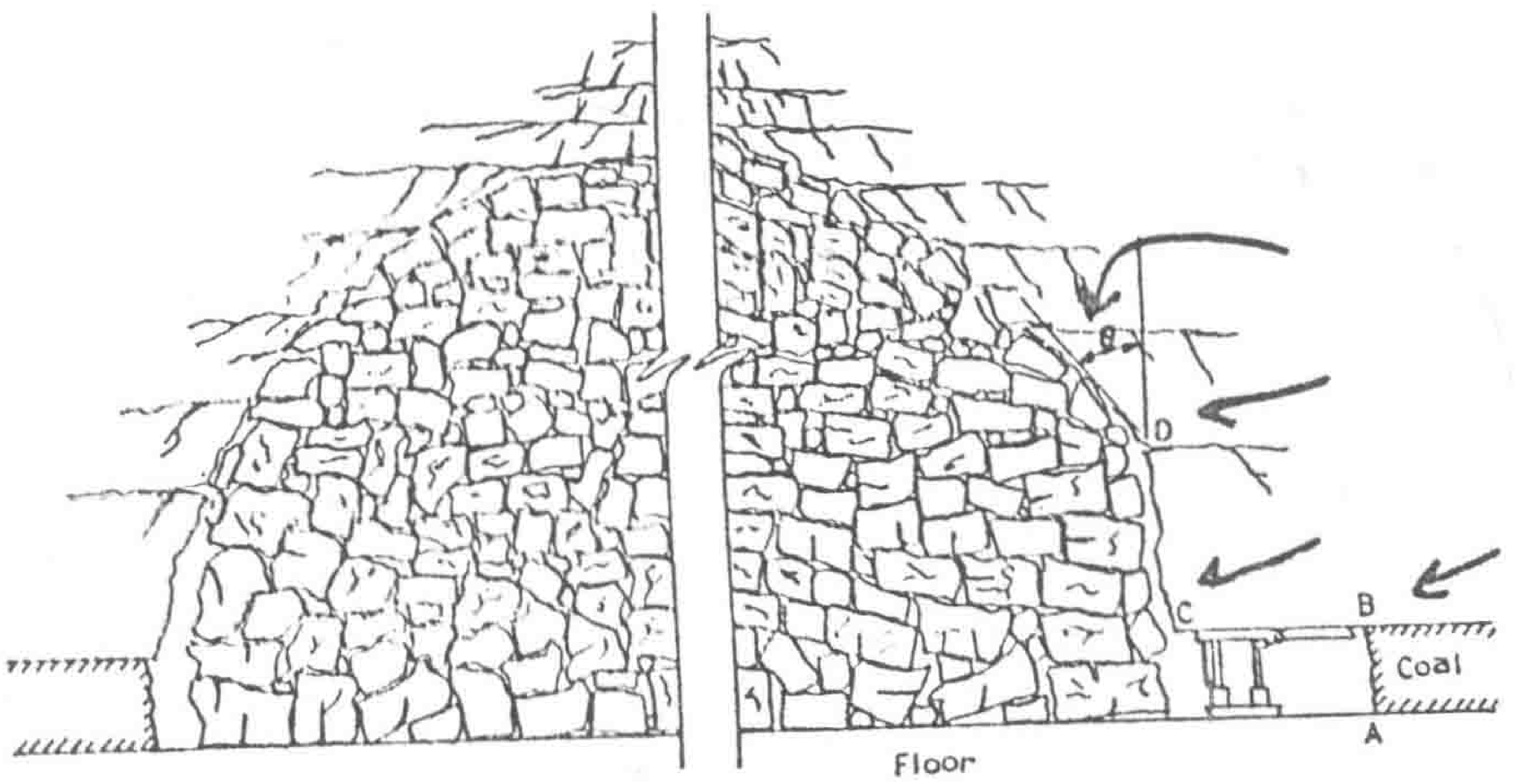

letters don't stand out

Fig. 8 Cross-Sectional View of a Longwall or Shortwall Panel

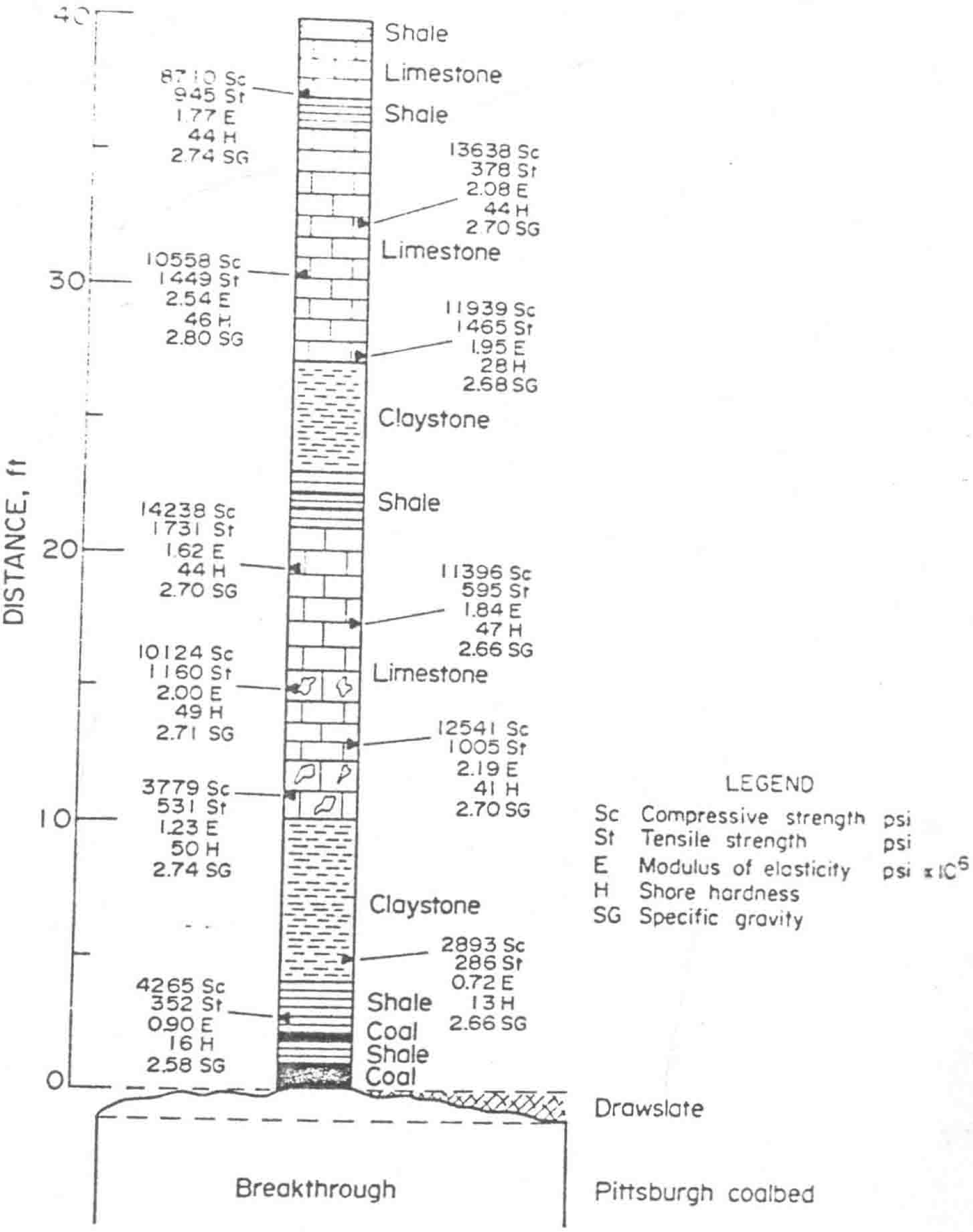

Fig. 9 Stratigraphic Column Showing Measured Properties

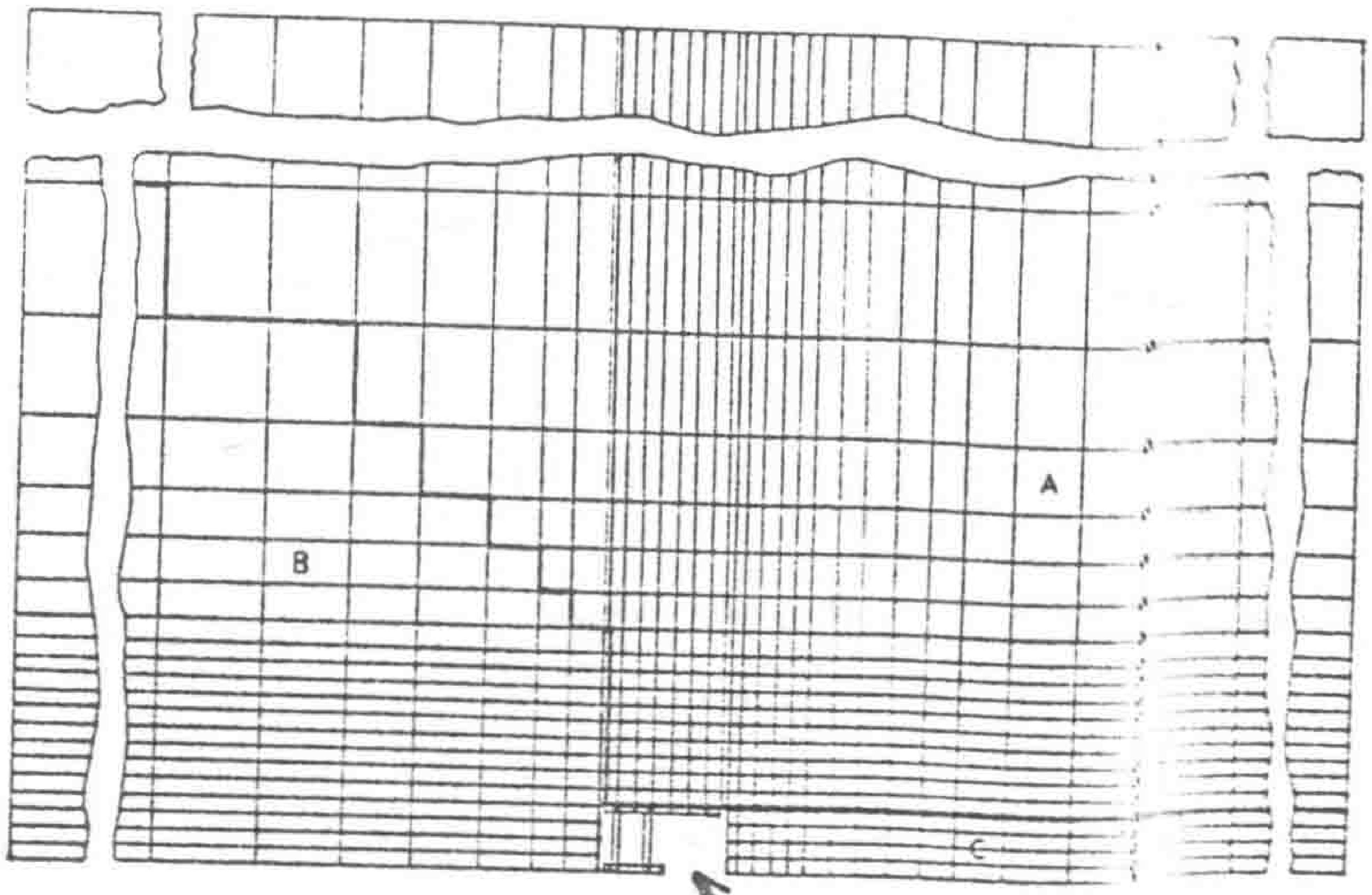

A. CHOCK

Mirror image needed.

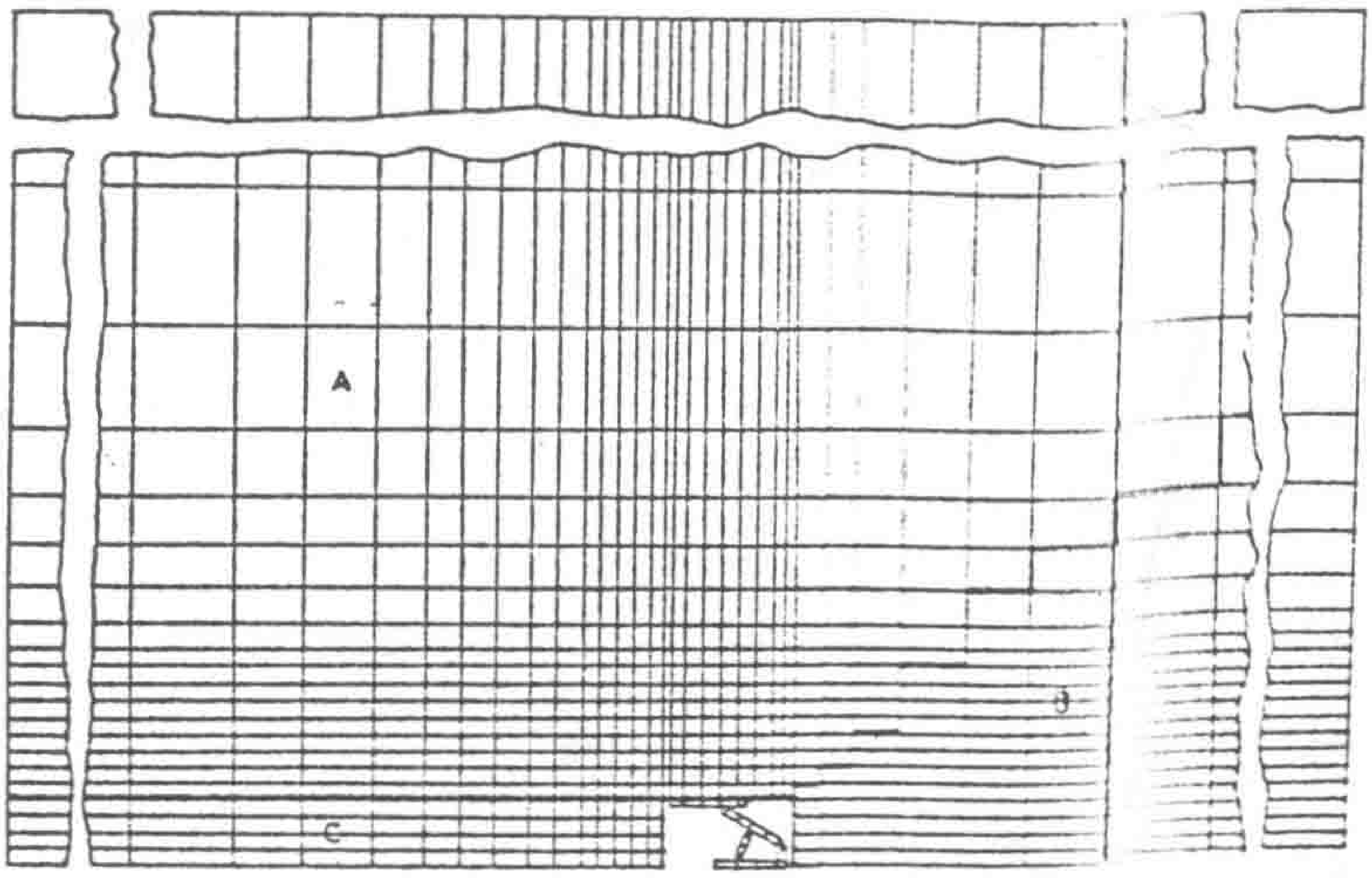

B. SHIELD

Fig. 10 Finite Element Models

Change one of chock around So that force is in same direction in both figures

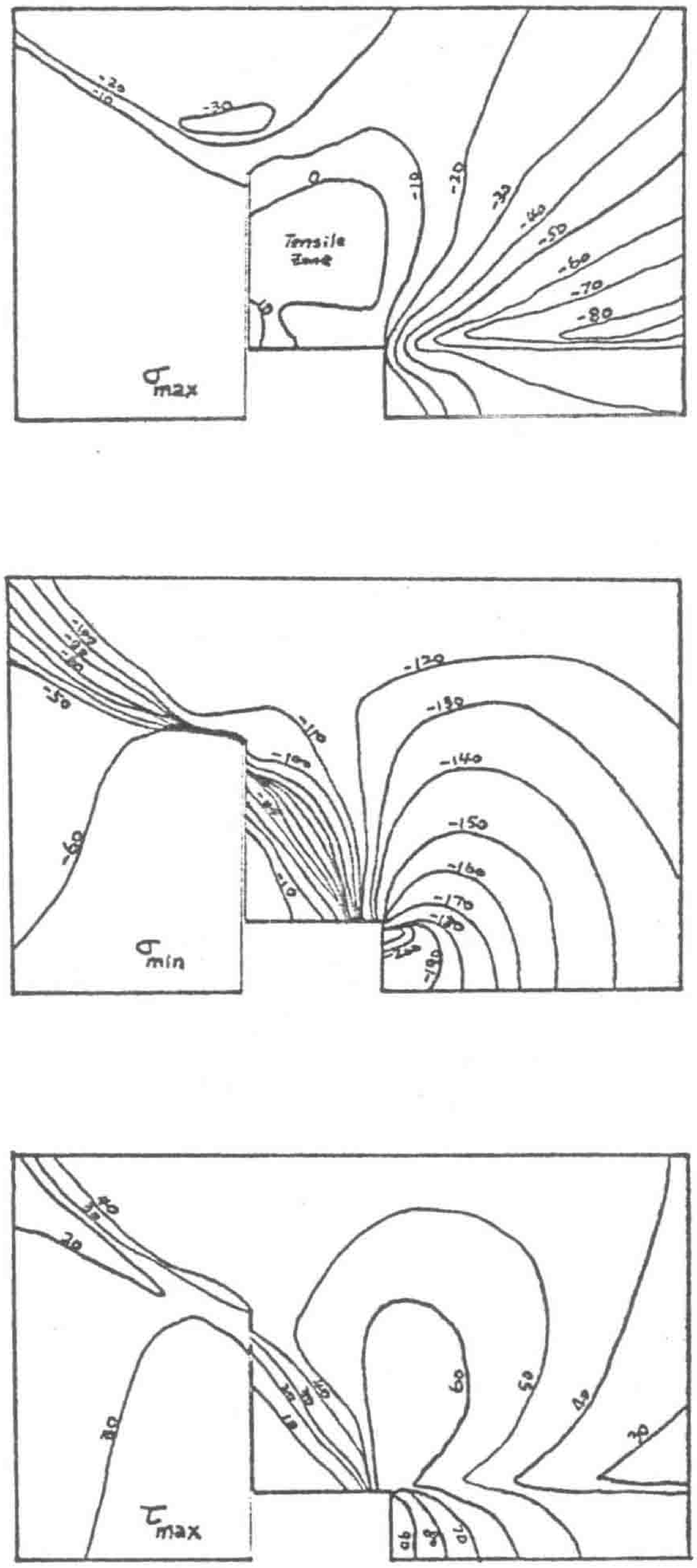

Fig. 11 Contour Maps of Stress Distribution for Faces Without Support. Numbers in the Maps are KSF (thousand pounds per square foot which is approximately 7 psi)

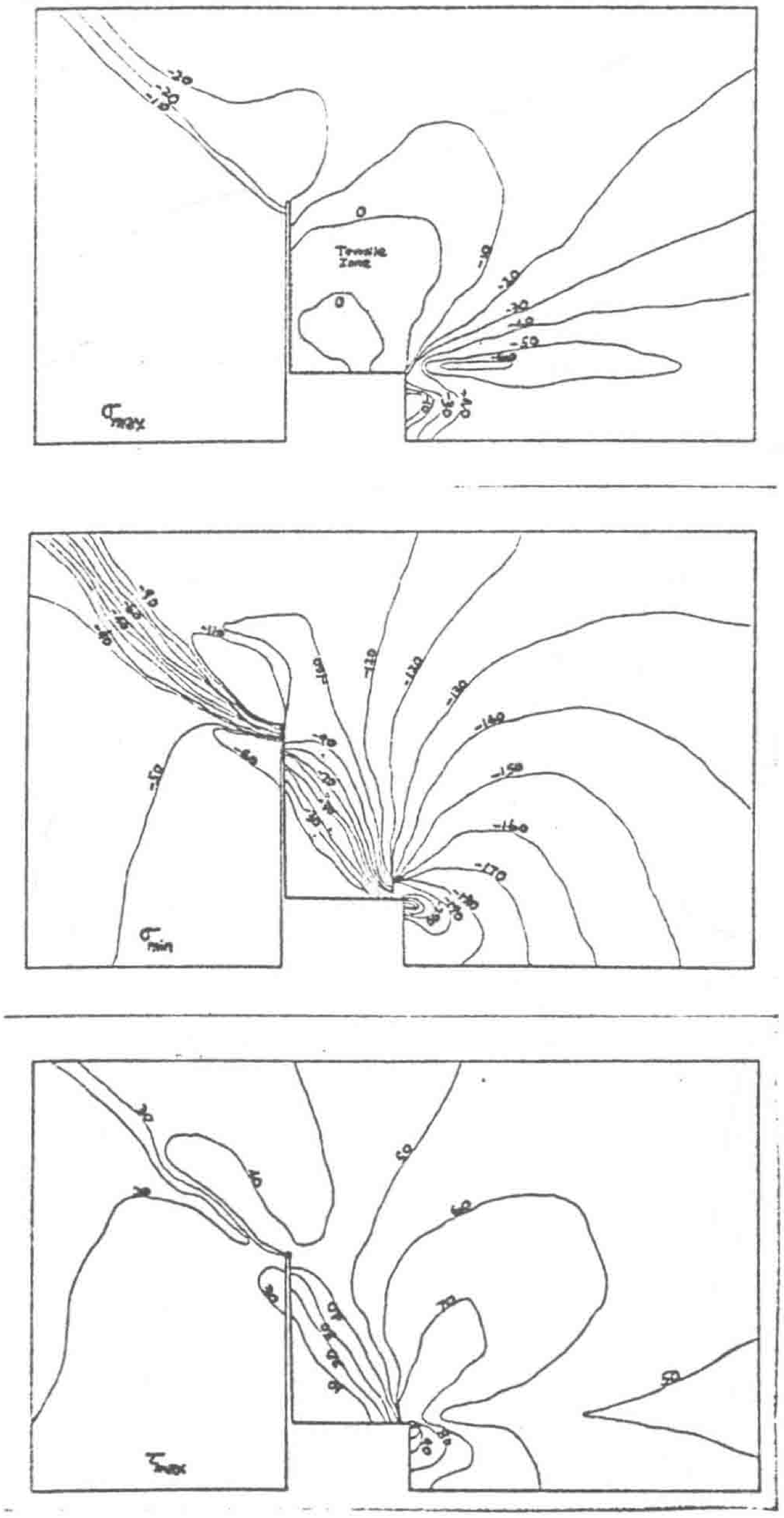

Fig. 12 Contour Maps of Stress Distributions for Faces with Chock Supports of 120 Tons. Numbers in KSF.

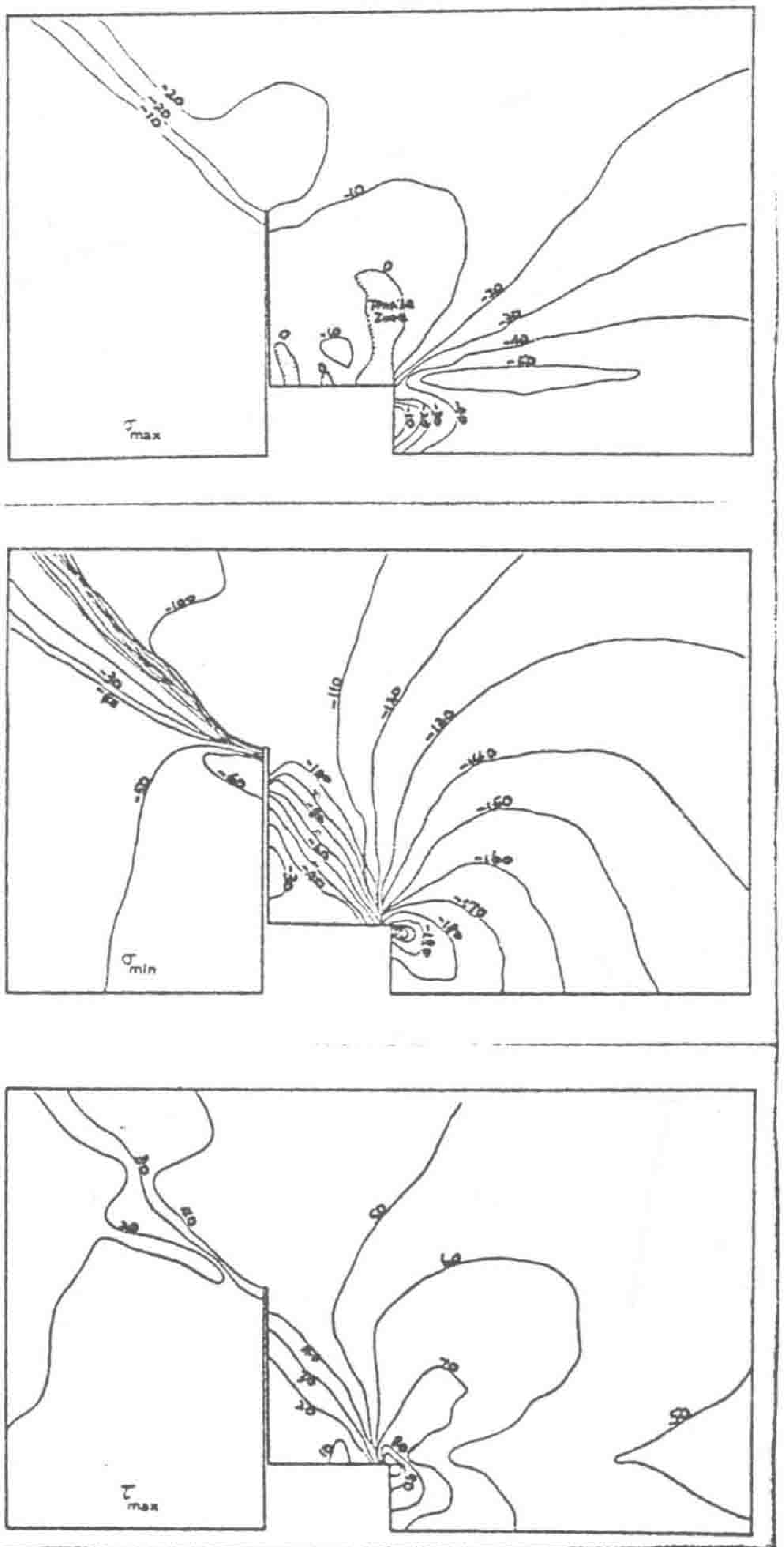

Fig. 13 Contour Maps of Stress Distributions for Faces with Chock Supports of 500 Tons. Numbers in KSF.

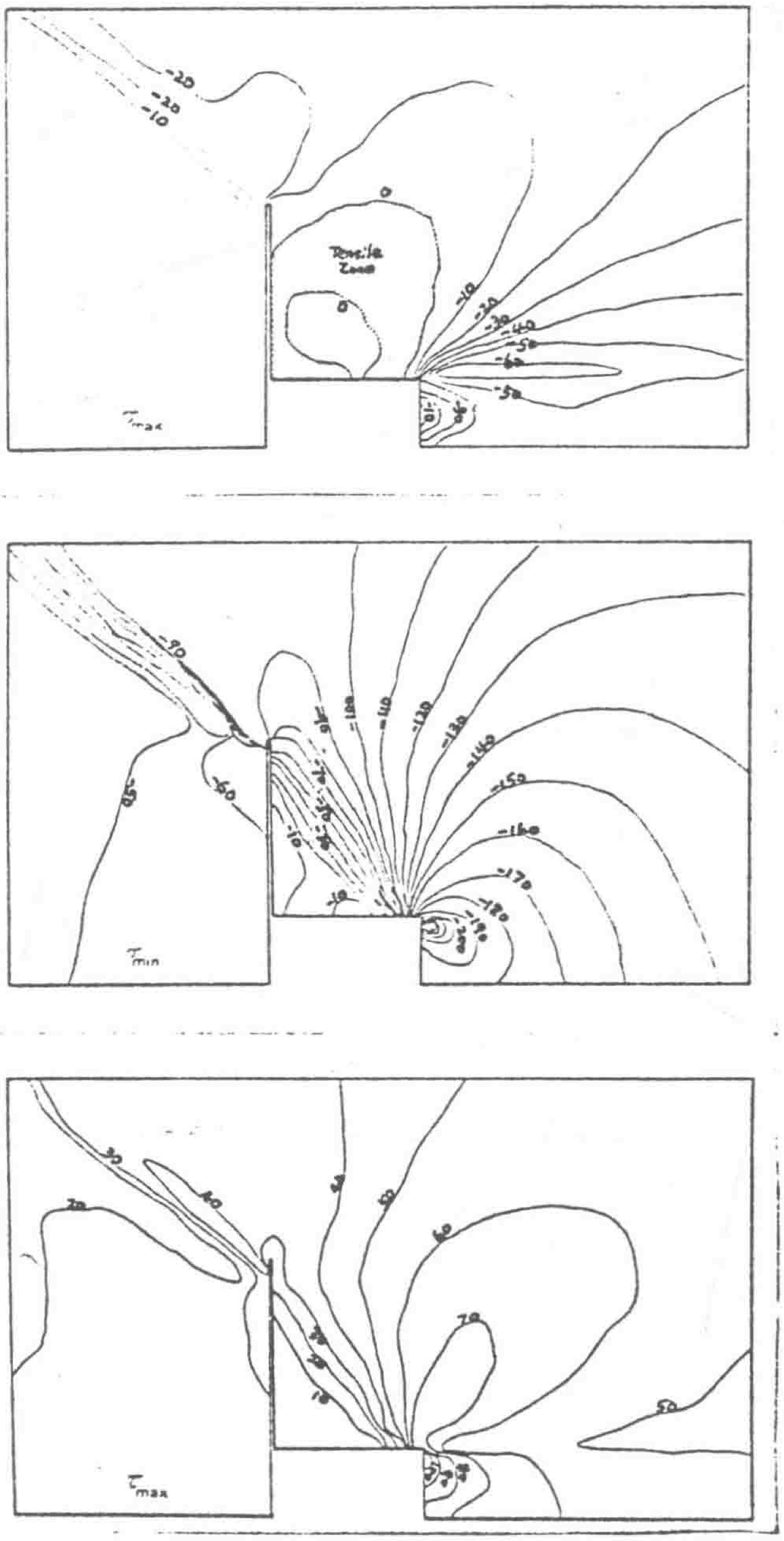

Fig. 14 Contour Maps of Stress Distribution for Faces with Longwall Chock Supports of 120 Tons Immediately after Coal Cutting. Numbers in KSF.

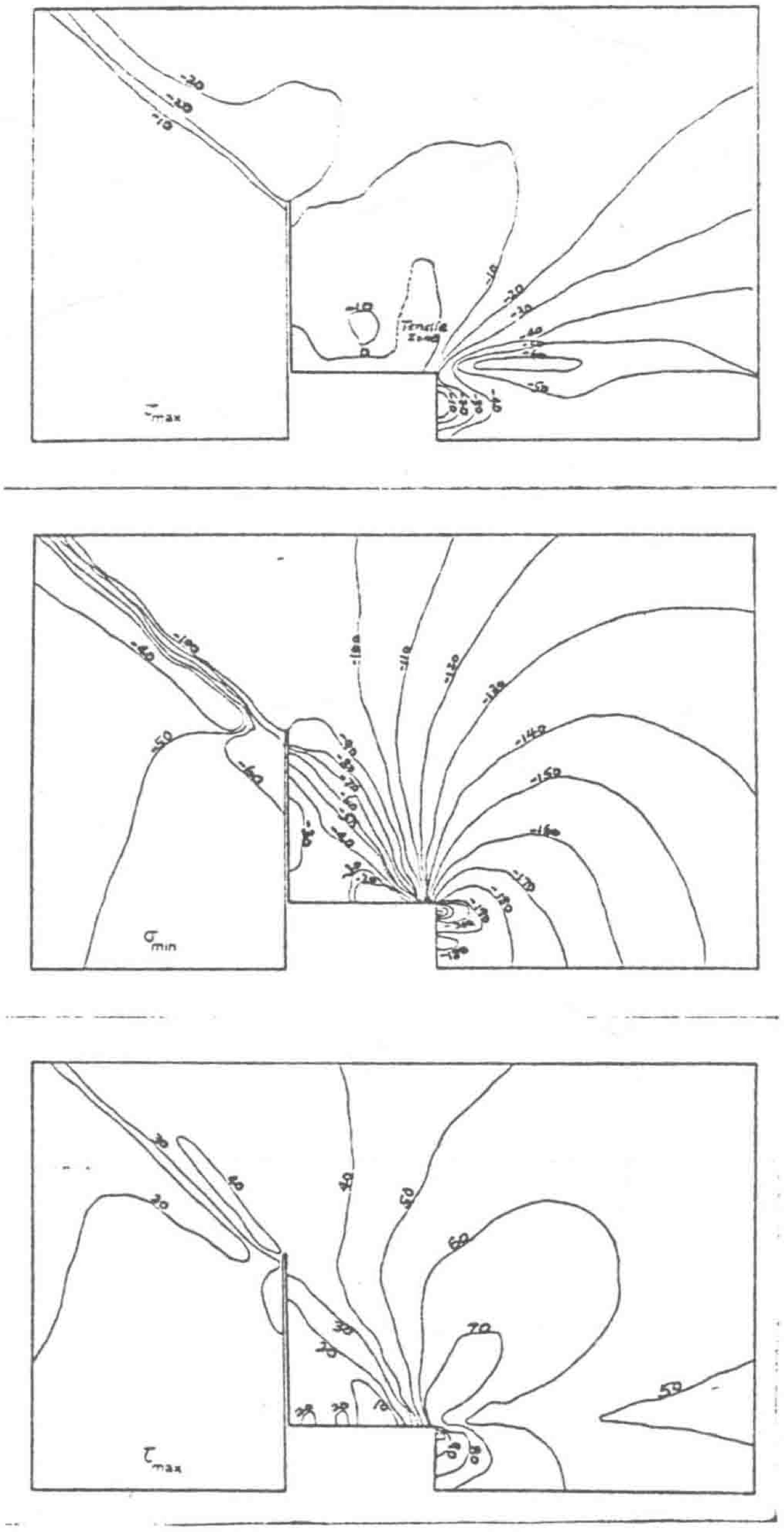

Fig. 15 Contour Maps of Stress Distribution for Faces with Longwall Chock Supports of 500 Tons Immediately after Coal Cutting. Numbers in KSF.

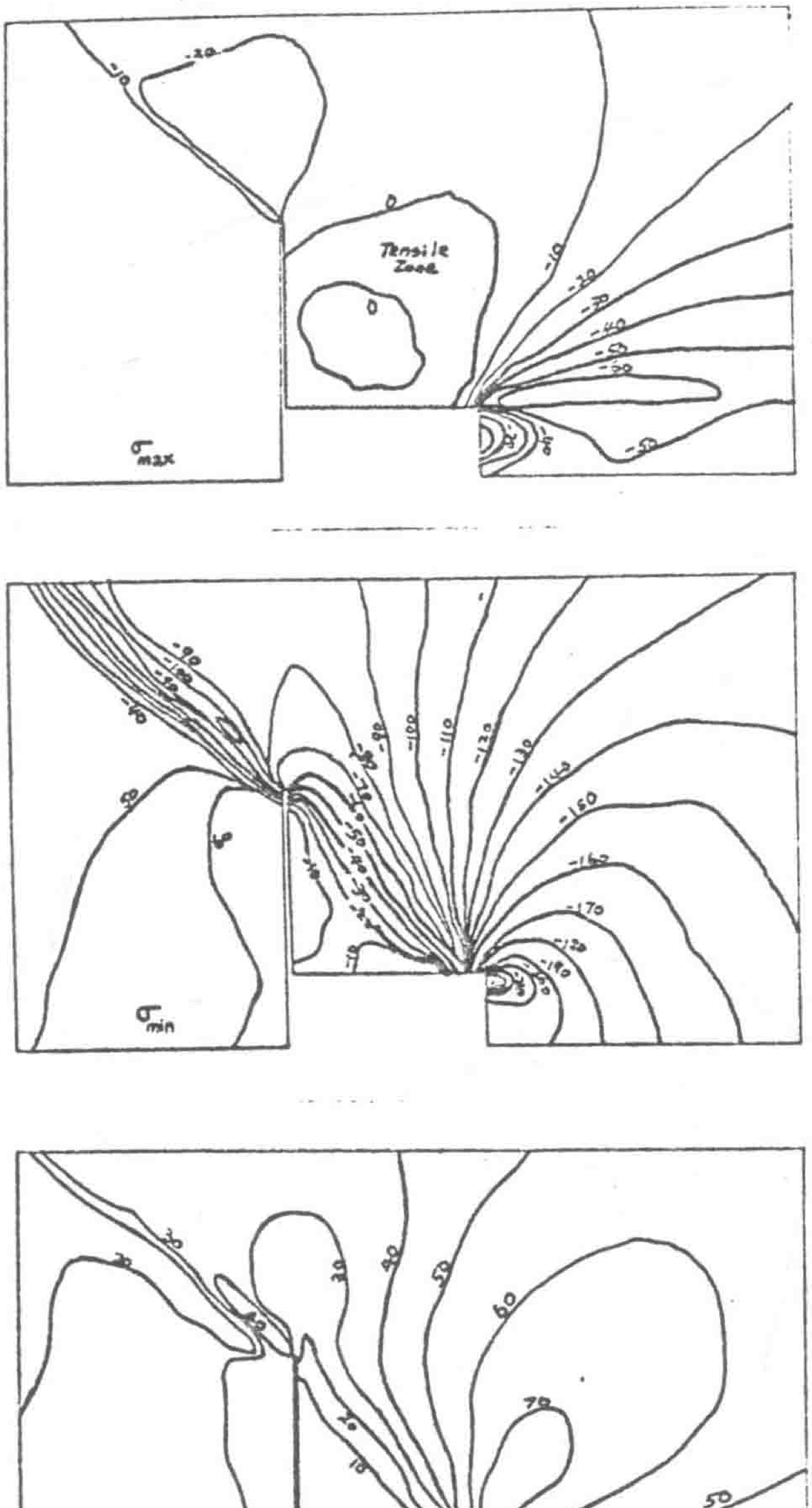

Fig. 16 Contour Maps of Stress Distribution for Faces with Shortwall Chock Supports of 125 Tons Immediately after Coal Cutting. Numbers in KSF.

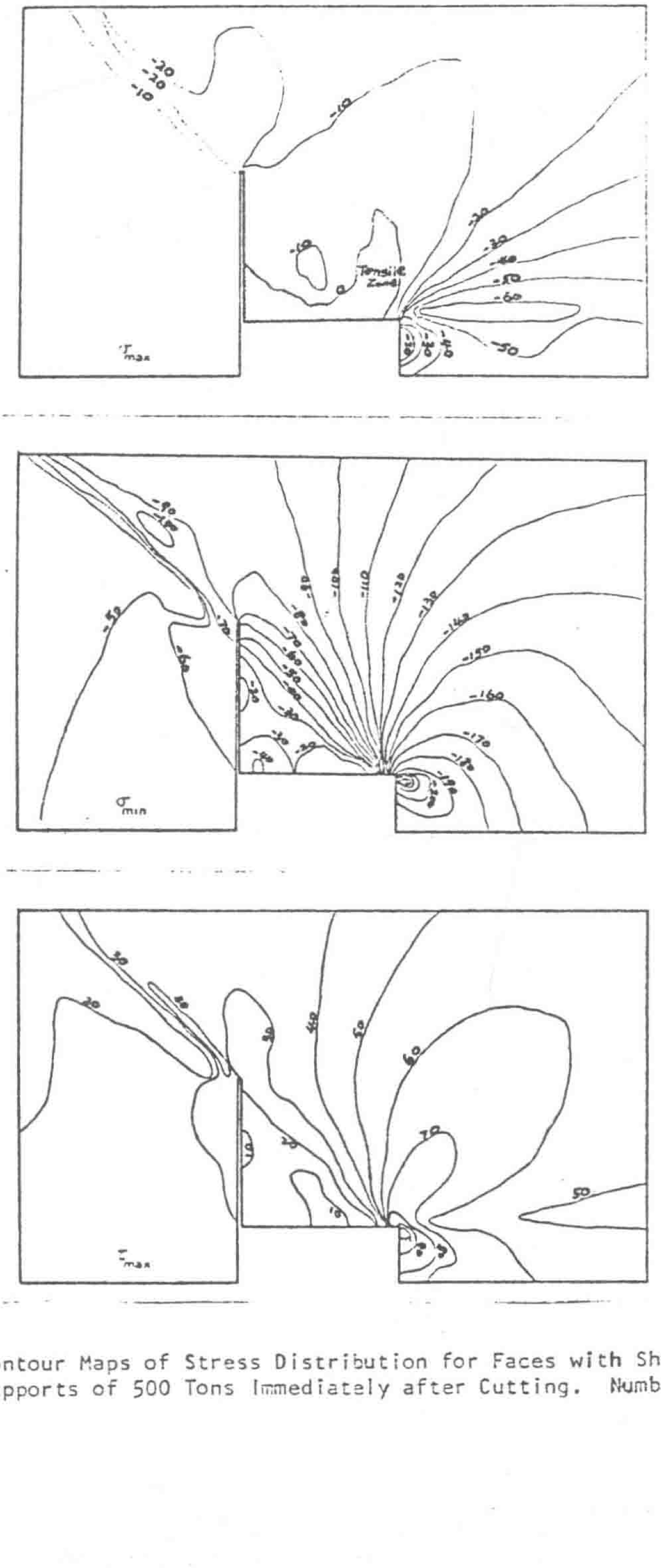

Fig. 17 Contour Maps of Stress Distribution for Faces with Shortwall Chock Supports of 500 Tons Immediately after Cutting. Numbers in KSF.

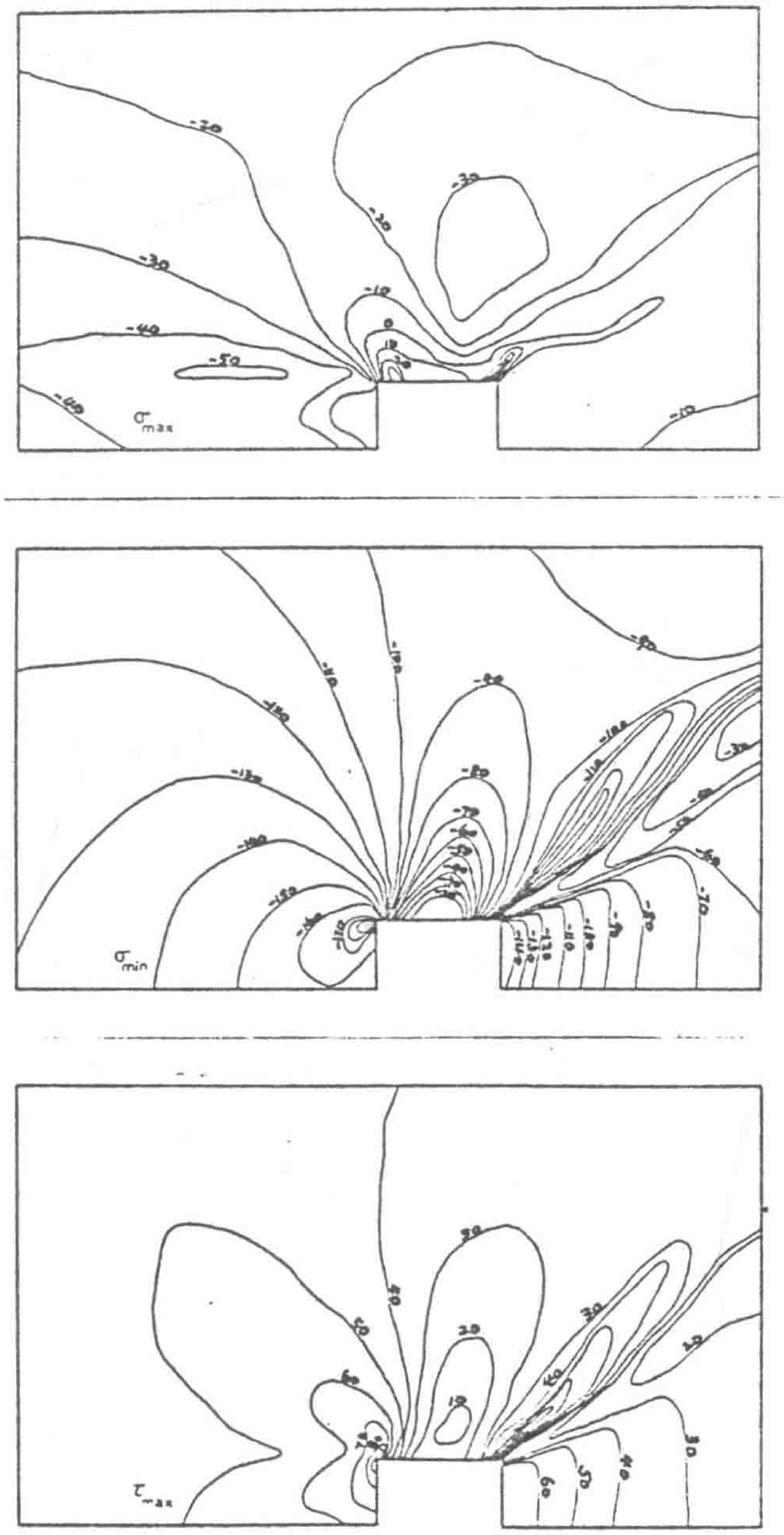

Fig. 18 Contour Maps of Stress Distribution for Faces with Shield Supports of 70 Tons. Numbers in KSF.

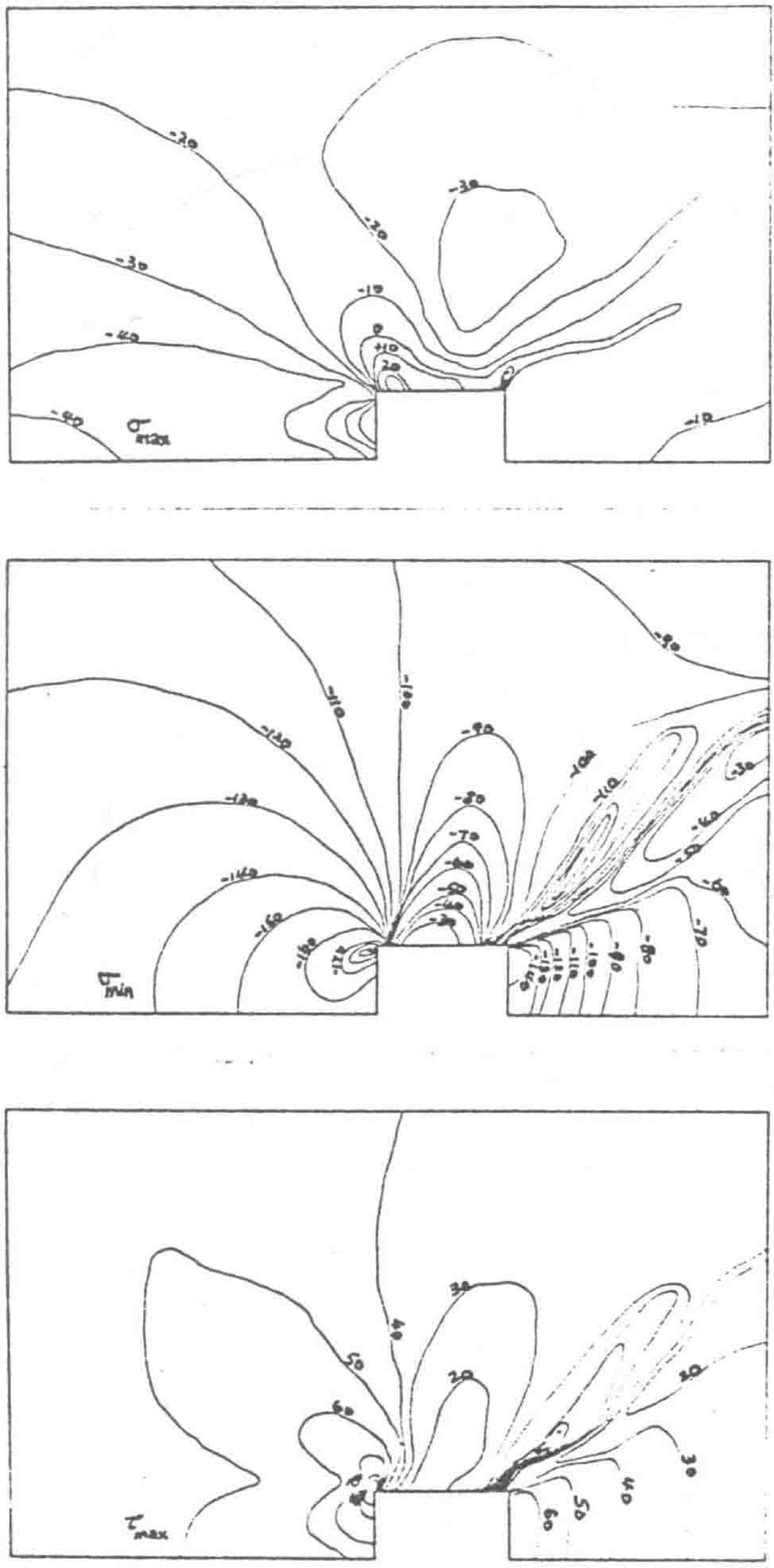

Fig. 19 Contour Maps of Stress Distribution for Faces with Shield Supports of 250 Tons. Numbers in KSF.